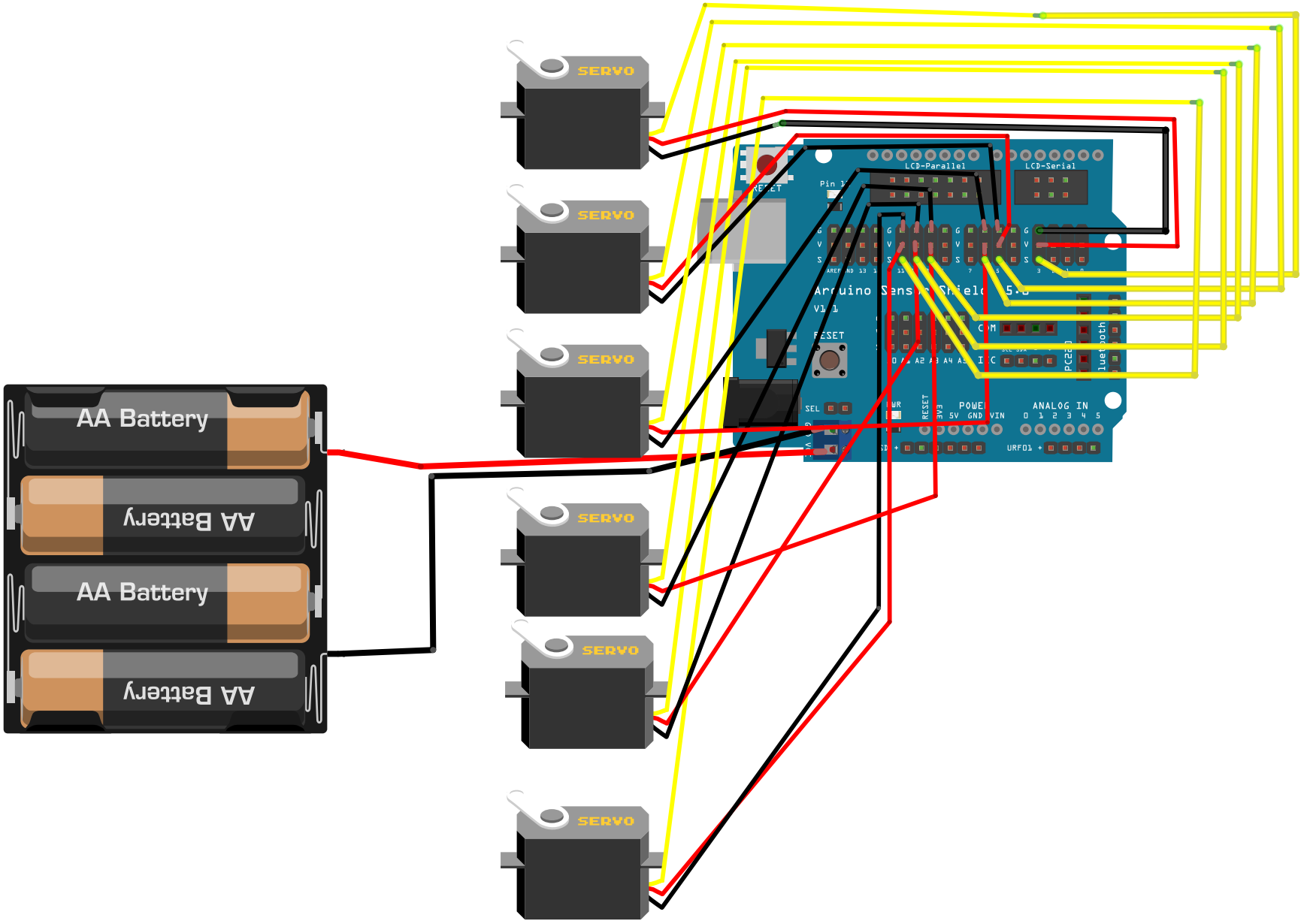
SERVO
SERVO
SERVO
SERVO
SERVO
SERVO
AA Battery
AA Battery
AA Battery
AA Battery
LCD-Parallel
LCD-Serial
RESET
POWER
ANALOG IN
fritzing