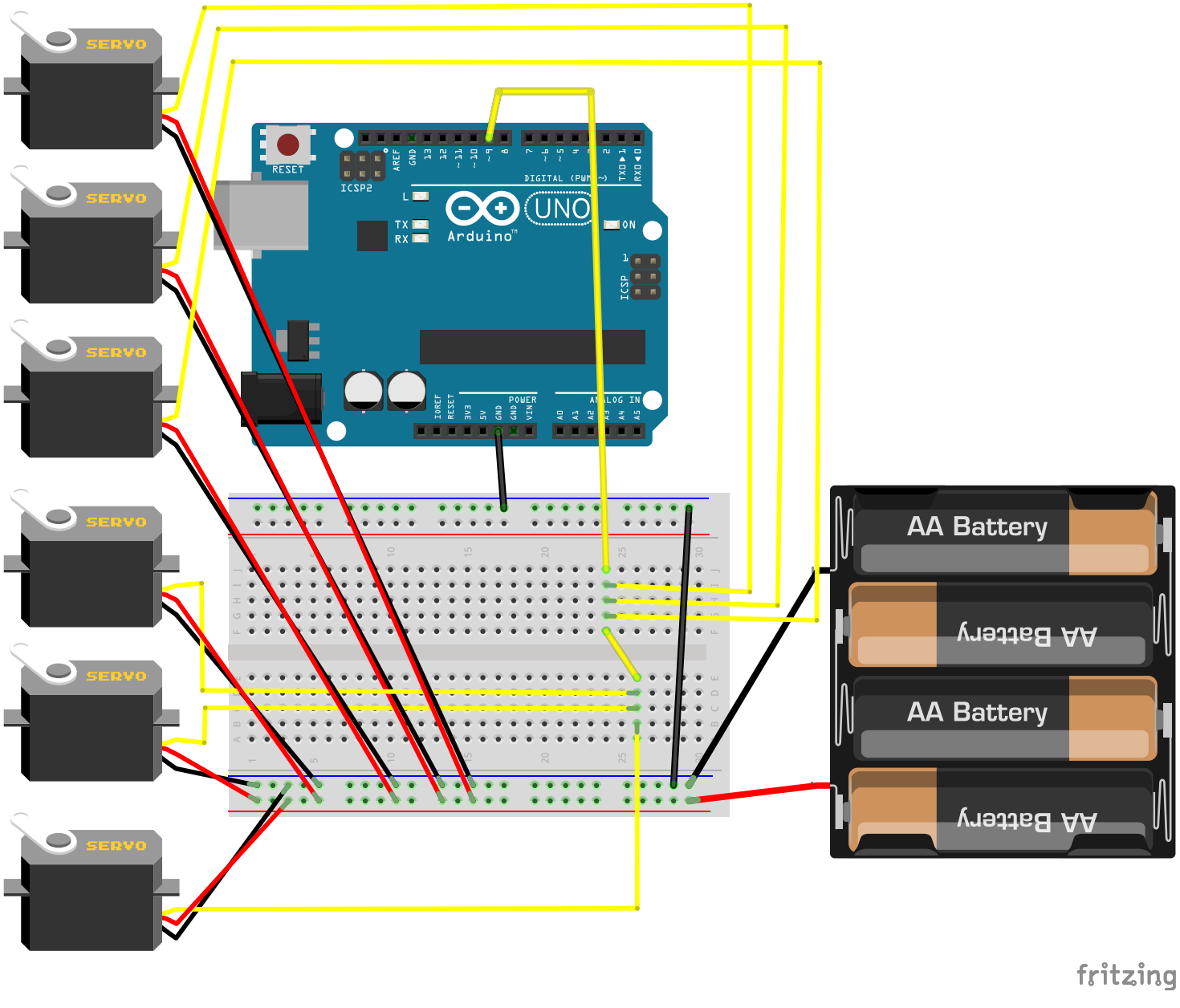
SERVO
SERVO
SERVO
SERVO
SERVO
SERVO
RESET
ICSP2
L
TX
RX
UNO
Arduino
ON
ICSP
DIGITAL (PWM ~)
POWER
ANALOG IN
AA Battery
AA Battery
AA Battery
AA Battery
fritzing